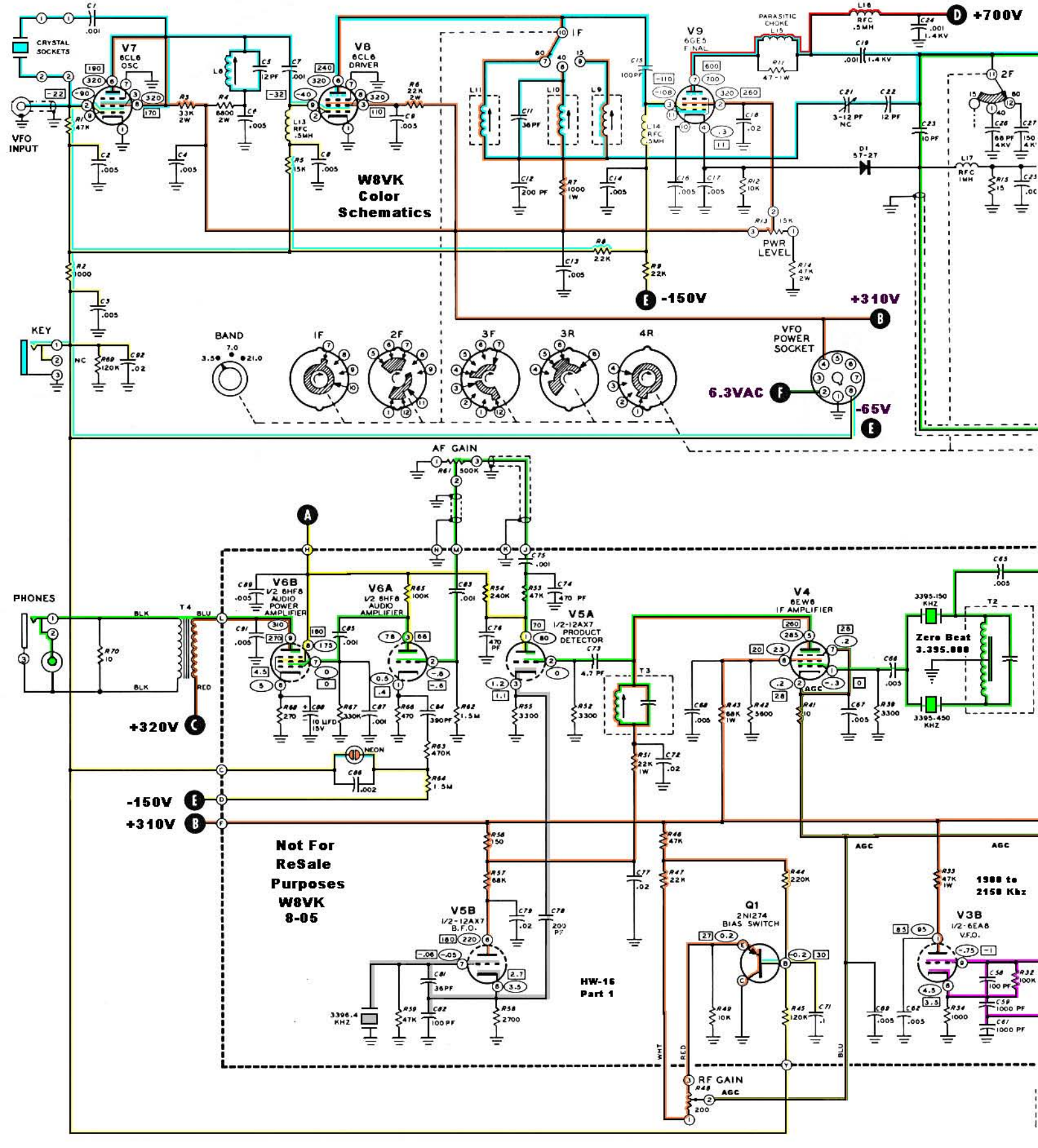
W8VK
Color
Schematics
Not For
ReSale
Purposes
W8VK
8-05
HW-16
Part 1
1900 to
2150 Khz
Zero Beat
3.395.000
+700V
+310V
-150V
-65V
6.3VAC
+320V
VFO
INPUT
CRYSTAL
SOCKETS
KEY
PHONES
BAND
VFO
POWER
SOCKET
PWR
LEVEL
AF GAIN
RF GAIN
V7
6CL6
OSC
V8
6CL6
DRIVER
V9
6GE5
FINAL
V6B
1/2 6HF8
AUDIO
POWER
AMPLIFIER
V6A
1/2 6HF8
AUDIO
AMPLIFIER
V5A
1/2-12AX7
PRODUCT
DETECTOR
V4
6EW6
IF AMPLIFIER
V5B
1/2-12AX7
B.F.O.
Q1
2N1274
BIAS SWITCH
V3B
1/2-6EA8
V.F.O.
PARASITIC
CHOKE
L15
RFC
.5MH
RFC
1MH
3395.150
KHZ
3395.450
KHZ
3396.4
KHZ
NEON
AGC
T4
T3
T2

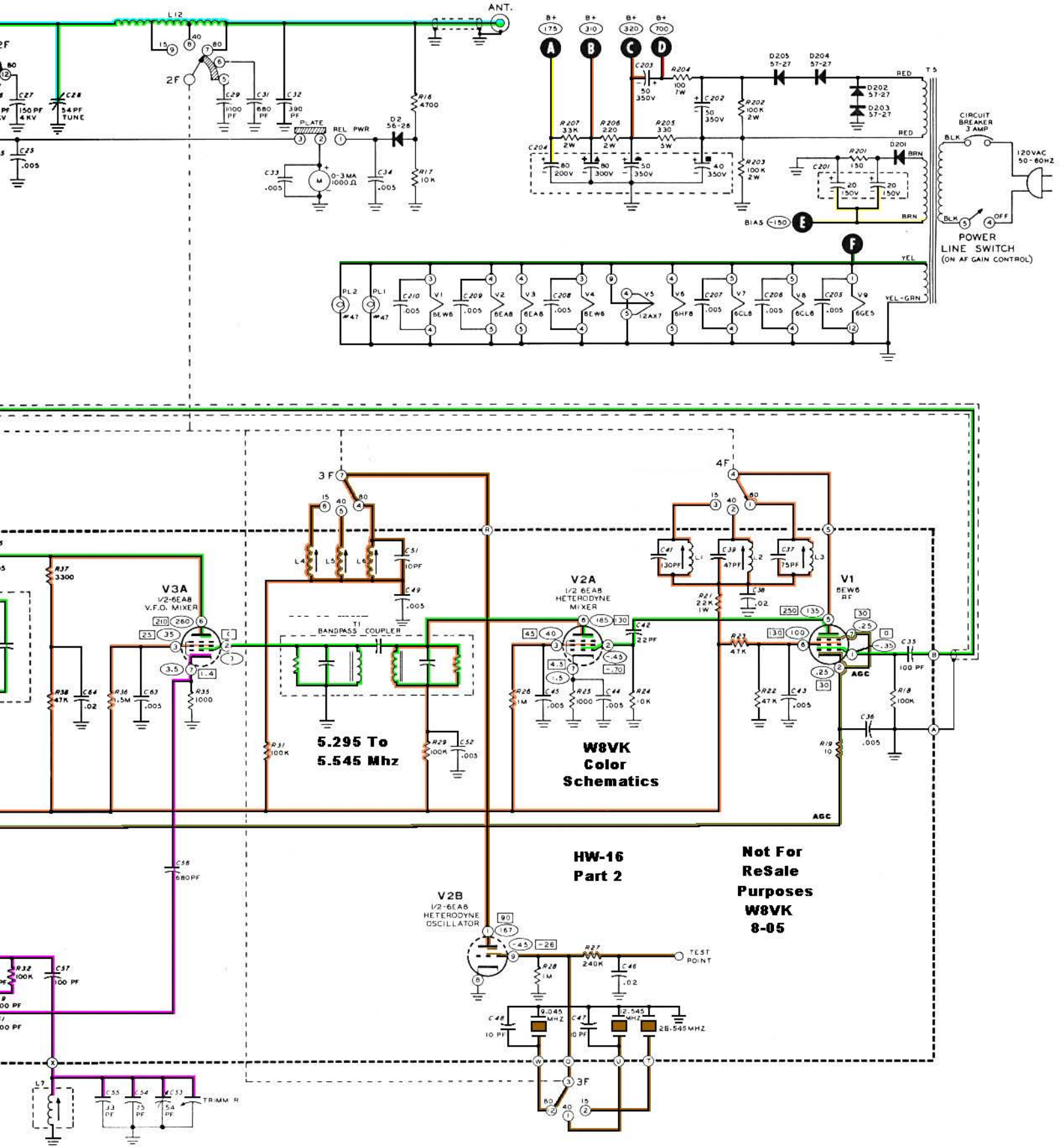
ANT.
L12
2F
C27 150 PF 4 KV
C28 54 PF TUNE
C25 .005
C29 1100 PF
C31 680 PF
C32 390 PF
PLATE
REL PWR
D2 56-28
R16 4700
C33 .005
0-3 MA 1000 Ω
C34 .005
R17 10K
B+ 175
B+ 310
B+ 320
B+ 700
A
B
C
D
C203 50 350V
R204 100 7W
D205 57-27
D204 57-27
D202 57-27
D203 57-27
T5
RED
R207 33K 2W
R206 220 2W
R205 330 5W
C202 50 350V
R202 100K 2W
C204 80 200V
80 300V
50 350V
40 350V
R203 100K 2W
R201 150
D201
BRN
C201 20 150V
20 150V
BIAS -150
E
F
YEL
CIRCUIT BREAKER 3 AMP
BLK
120VAC 50-60HZ
OFF
POWER LINE SWITCH (ON AF GAIN CONTROL)
PL2 #47
PL1 #47
C210 .005
V1 6EW6
C209 .005
V2 6EA8
V3 6EA8
C208 .005
V4 6EW6
V5 12AX7
V6 6HF8
C207 .005
V7 6CL8
C206 .005
V8 6CL8
C205 .005
V9 6GE5
YEL-GRN
3F
4F
R37 3300
V3A 1/2-6EA8 V.F.O. MIXER
R38 47K
C64 .02
R36 1.5M
C63 .005
R35 1000
L4
L5
L6
C51 10PF
C49 .005
T1 BANDPASS COUPLER
R31 100K
R29 100K
C52 .005
5.295 To 5.545 Mhz
V2A 1/2 6EA8 HETERODYNE MIXER
C42 22PF
R26 1M
C45 .005
R25 1000
C44 .005
R24 10K
C41 130PF
L1
C39 47PF
L2
C37 75PF
L3
C38 .02
R21 22K 1W
V1 6EW6 RF
R23 47K
R22 47K
C43 .005
AGC
C35 100 PF
R18 100K
C36 .005
R19 10
W8VK Color Schematics
HW-16 Part 2
Not For ReSale Purposes W8VK 8-05
C56 680PF
V2B 1/2-6EA8 HETERODYNE OSCILLATOR
R27 240K
TEST POINT
R28 1M
C46 .02
C48 10 PF
9.045 MHZ
C47 10 PF
12.545 MHZ
26.545 MHZ
R32 100K
C57 100 PF
L7
C55 33 PF
C54 75 PF
C53 54 PF
TRIMMER